8111057

SUP'AIR automatic grey metal

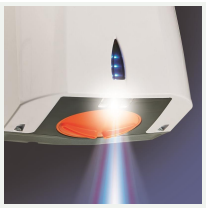

SUP'AIR hand dryer metallic gray with ultra fast drying and low power consumption. Designed for intensive use.

PRODUCT ADVANTAGES

- Ultra-fast drying
- Very low energy consumption
- Compact
- Excellent quality-price ratio
- Can easily replace an existing hand dryer

10 YEARS REPAIRABLE

MADE IN FRANCE

8111057

SUP'AIR automatic grey metal

SPECIFICATIONS

Material	ABS
Colour	Grey
Drying time (s)	10-15s
Sound level (dB) (1m in front of the appliance)	75
Outlet air speed (m/s)	90
Air flow rate (m^3/h)	130
Air outlet temperature (°C)	40
Safety in case of malfunction	Yes
Filter	Anti-bacterial filter (Option)
Vandal-safe	Yes
Drying zone lighting	Yes

ELECTRICAL

Rated Power (W)	600
Voltage	220-240V
Frequency (Hz)	50
Standby power consumption (W)	2.2000
Detection type	Infrared
Motor speed (rpm)	24000
Type of motor	Brushed AC
Motor lifetime (number of operations)	350000

DIMENSIONS

Height (mm)	292
Width (mm)	216
Depth (mm)	195
Weight (kg)	3.4200

BOX DIMENSIONS

Height (mm)	295
Width (mm)	240
Depth (mm)	205
Weight (kg)	3.7300

TECHNICAL DRAWING

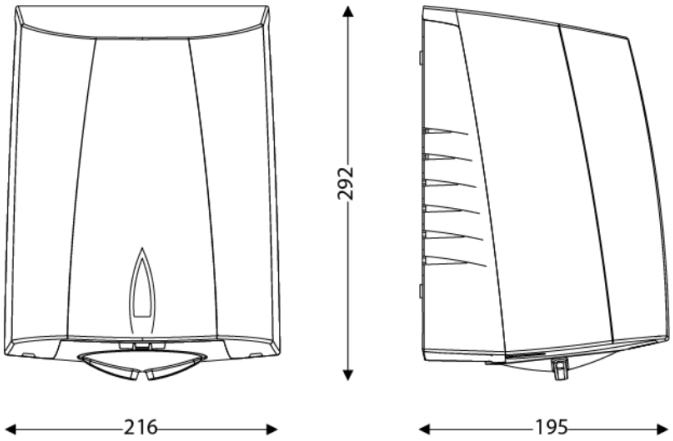

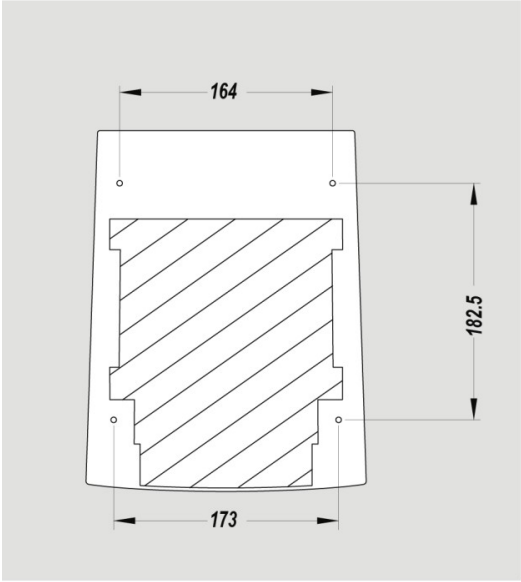

RECOMMENDED INSTALLATION HEIGHTS

- Men installation height (cm) : 130
- Women installation height (cm) : 125
- Children installation height (cm) : 120
- Disabled person installation height (cm) : 100